

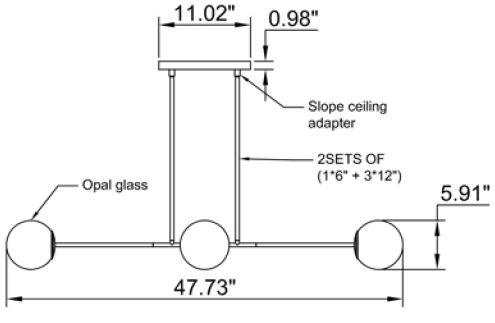

C9090-4ABOP

Finish: Age Brass

Light Source: 4 x E12 Candelabra Base

Wattage: 4 x 40W

Voltage: 120V

Overall Height: 48”

VINCI LIGHTING

